# Product data sheet

Specifications

Green Premium™

## Head, Harmony XB5, red Ø 40 Emergency switching off pushbutton Ø22 mm latching turn release

ZB5AS54

Discontinued

Discontinued on: 1/01/2008

End-of-service on: 15/04/2023

## Main

| | |
|---|---|
| **Range Of Product** | Harmony XB5 |
| **Product Or Component Type** | Head |
| **Product Destination** | Emergency stop push-button |
| **Device Short Name** | ZB5 |
| **Bezel Material** | Plastic |
| **Head Type** | Standard |
| **Mounting Diameter** | 22 mm |
| **Sale Per Indivisible Quantity** | 1 |
| **Shape Of Signaling Unit Head** | Round |
| **Type Of Operator** | mechanical latching |
| **Reset** | Turn to release |
| **Operator Profile** | Red mushroom Ø 40 mm, unmarked |

## Complementary

| | |
|---|---|
| **Cad Overall Width** | 30 mm |
| **Cad Overall Height** | 30 mm |
| **Cad Overall Depth** | 57 mm |
| **Net Weight** | 0.044 kg |
| **Mechanical Durability** | 300000 cycles |
| **Station Name** | XALD 1 cut-out<br>XALK 1 cut-out |
| **Electrical Composition Code** | C7 for <4 contacts using single blocks in front mounting<br>C8 for <4 contacts using single and double blocks in front mounting<br>C11 for <3 contacts using single blocks in front mounting<br>C15 for <1 contacts using single blocks in front mounting<br>SF1 for <3 contacts using single blocks in front mounting<br>SR1 for <3 contacts using single blocks in rear mounting<br>C10 for <4 contacts using single and double blocks in front mounting |
| **Compatibility Code** | ZB5 |

## Environment

| | |
|---|---|
| **Protective Treatment** | TH |

Disclaimer: This documentation is not intended as a substitute for and is not to be used for determining suitability or reliability of these products for specific user applications

| | |
|---|---|
| **Ambient Air Temperature For Storage** | -40…70 °C |
| **Ambient Air Temperature For Operation** | -40…70 °C |
| **Overvoltage Category** | Class II conforming to IEC 60536 |
| **Ip Degree Of Protection** | IP66 conforming to IEC 60529<br>IP67<br>IP69<br>IP69K |
| **Nema Degree Of Protection** | NEMA 13<br>NEMA 4X |
| **Resistance To High Pressure Washer** | 7000000 Pa at 55 °C, distance : 0.1 m |
| **Ik Degree Of Protection** | IK03 conforming to IEC 50102 |
| **Standards** | JIS C8201-5-1<br>UL 508<br>GB 14048.5<br>EN/IEC 60947-5-5<br>EN/IEC 60947-5-1<br>CSA C22.2 No 14<br>IEC 60364-5-53<br>EN/IEC 60947-5-4<br>EN/IEC 60947-1<br>JIS C8201-1 |
| **Product Certifications** | CSA<br>BV<br>UL listed<br>LROS (Lloyds register of shipping)<br>DNV<br>GL |
| **Vibration Resistance** | 5 gn (f= 2…500 Hz) conforming to IEC 60068-2-6 |
| **Shock Resistance** | 30 gn (duration = 18 ms) for half sine wave acceleration conforming to IEC 60068-2-27<br>50 gn (duration = 11 ms) for half sine wave acceleration conforming to IEC 60068-2-27 |

## Packing Units

| | |
|---|---|
| **Unit Type Of Package 1** | PCE |
| **Number Of Units In Package 1** | 1 |
| **Package 1 Height** | 8.8 cm |
| **Package 1 Width** | 3.4 cm |
| **Package 1 Length** | 5.4 cm |
| **Package 1 Weight** | 41.0 g |
| **Unit Type Of Package 2** | CAR |
| **Number Of Units In Package 2** | 1 |
| **Package 2 Height** | 8.8 cm |
| **Package 2 Width** | 3.4 cm |
| **Package 2 Length** | 5.4 cm |
| **Package 2 Weight** | 50.0 g |
| **Unit Type Of Package 3** | S03 |
| **Number Of Units In Package 3** | 120 |
| **Package 3 Height** | 30.0 cm |
| **Package 3 Width** | 30.0 cm |
| **Package 3 Length** | 40.0 cm |

| | |
|---|---|
| **Package 3 Weight** | 5.753 kg |

## Contractual warranty

| | |
|---|---|
| **Warranty** | 18 months |

## Sustainability

**Green Premium™ label** is Schneider Electric's commitment to delivering products with best-in-class environmental performance. Green Premium promises compliance with the latest regulations, transparency on environmental impacts, as well as circular and low-$CO_2$ products.

**Guide to assessing product sustainability** is a white paper that clarifies global eco-label standards and how to interpret environmental declarations.

Learn more about Green Premium >

Guide to assess a product's sustainability >

Transparency RoHS/REACh

## Well-being performance

| | |
|---|---|
| Reach Free Of Svhc | |
| Toxic Heavy Metal Free | |
| Mercury Free | |
| Rohs Exemption Information | Yes |

## Certifications & Standards

| | |
|---|---|
| **Reach Regulation** | REACh Declaration |
| **Eu Rohs Directive** | Pro-active compliance (Product out of EU RoHS legal scope)<br>EU RoHS Declaration |
| **China Rohs Regulation** | China RoHS declaration |
| **Environmental Disclosure** | Product Environmental Profile |
| **Circularity Profile** | No need of specific recycling operations |

Dimensions Drawings

## Dimensions

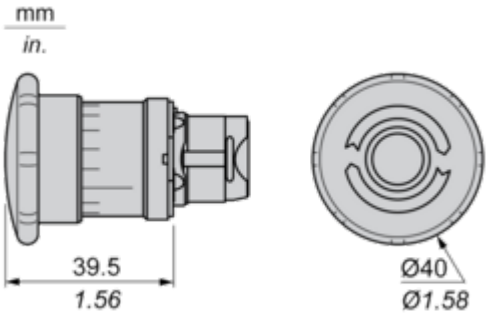

## Mounting and Clearance

### Panel Cut-out for Pushbuttons, Switches and Pilot Lights (Finished Holes, Ready for Installation)

### Connection by Screw Clamp Terminals or Plug-in Connectors or on Printed Circuit Board

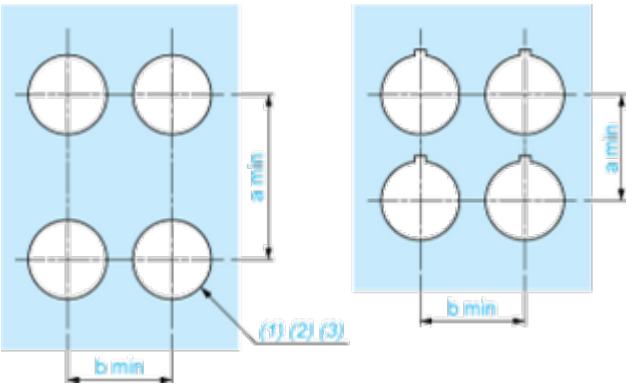


**(1)** Diameter on finished panel or support
**(2)** For selector switches and Emergency stop buttons, use of an anti-rotation plate type ZB5AZ902 is recommended.
**(3)** Ø22.5 mm recommended (Ø22.3 $_{0}^{+0.4}$) / Ø0.89 in. recommended (Ø0.88 in. $_{0}^{+0.016}$)

| Connections | a in mm | a in in. | b in mm | b in in. |
|---|---|---|---|---|
| By screw clamp terminals or plug-in connector | 40 | 1.57 | 30 | 1.18 |
| By Faston connectors | 45 | 1.77 | 32 | 1.26 |
| On printed circuit board | 30 | 1.18 | 30 | 1.18 |

### Detail of Lug Recess

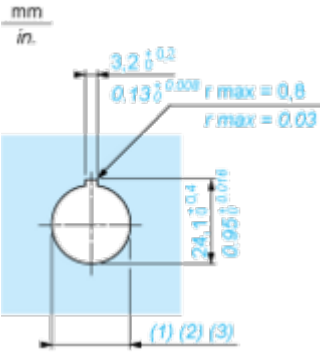


**(1)** Diameter on finished panel or support
**(2)** For selector switches and Emergency stop buttons, use of an anti-rotation plate type ZB5AZ902 is recommended.
**(3)** Ø22.5 mm recommended (Ø22.3 $_{0}^{+0.4}$) / Ø0.89 in. recommended (Ø0.88 in. $_{0}^{+0.016}$)

## Pushbuttons, Switches and Pilot Lights for Printed Circuit Board Connection

### Panel Cut-outs (Viewed from Installer's Side)

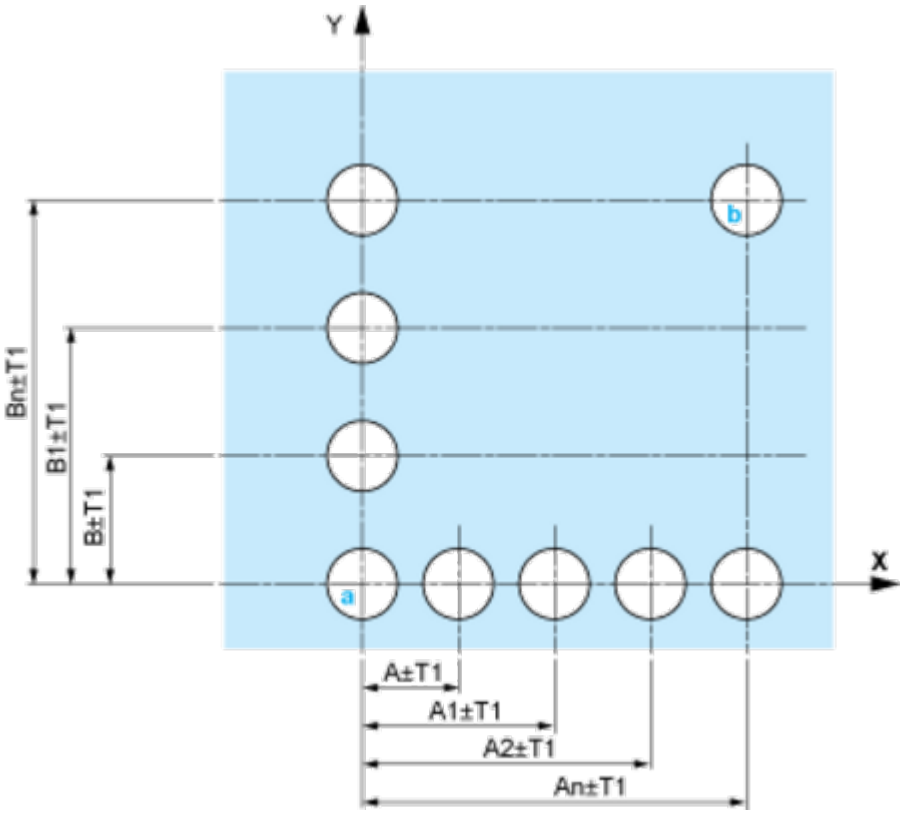


**A:** 30 mm min. / 1.18 in. min.
**B:** 40 mm min. / 1.57 in. min.

### Printed Circuit Board Cut-outs (Viewed from Electrical Block Side)

Dimensions in mm

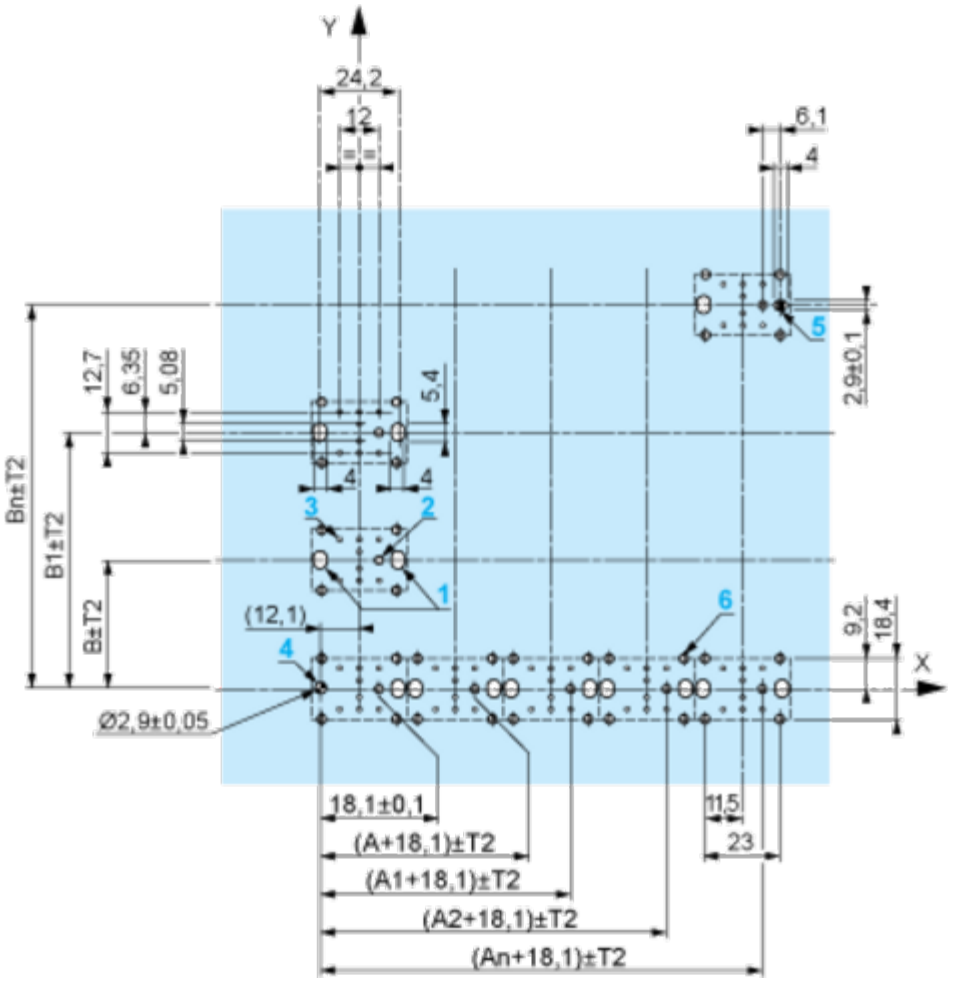


**A:** 30 mm min.
**B:** 40 mm min.
Dimensions in in.

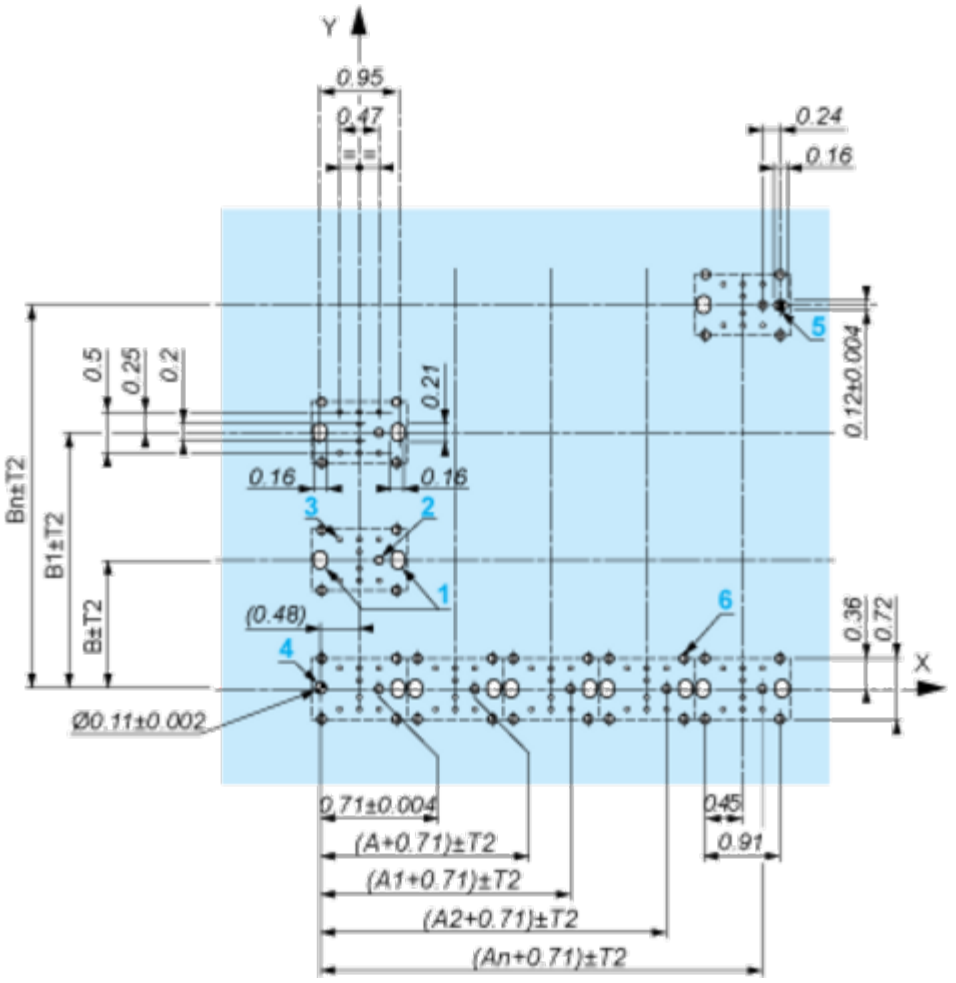


**A:** 1.18 in. min.
**B:** 1.57 in. min.

### General Tolerances of the Panel and Printed Circuit Board

The cumulative tolerance must not exceed 0.3 mm / 0.012 in.: T1 + T2 = 0.3 mm max.

### Installation Precautions

- Minimum thickness of circuit board: 1.6 mm / 0.06 in.
- Cut-out diameter: 22.4 mm ± 0.1 / 0.88 in. ± 0.004
- Orientation of body/fixing collar ZB5AZ009: ± 2°30' (excluding cut-outs marked **a** and **b**).
- Tightening torque of screws ZBZ006: 0.6 N.m (5.3 lbf.in) max.
- Allow for one ZB5AZ079 fixing collar/pillar and its fixing screws:
  - every 90 mm / 3.54 in. horizontally (X), and 120 mm / 4.72 in. vertically (Y).
  - with each selector switch head (ZB5AD•, ZB5AJ•, ZB5AG•).

The fixing centers marked **a** and **b** are diagonally opposed and must align with those marked **4** and **5**.

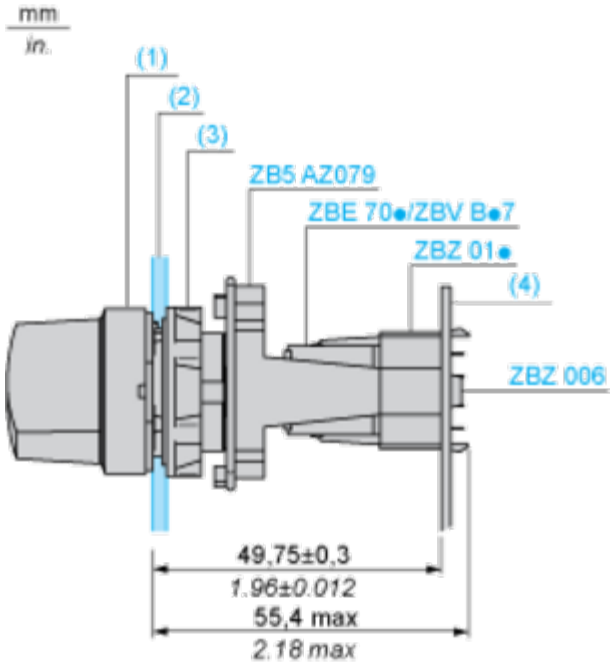


**(1)** Head ZB5AD•
**(2)** Panel
**(2)** Nut
**(4)** Printed circuit board

### Mounting of Adapter (Socket) ZBZ01•

- **1** 2 elongated holes for ZBZ006 screw access
- **2** 1 hole Ø 2.4 mm ± 0.05 / 0.09 in. ± 0.002 for centring adapter ZBZ01•
- **3** 8 × Ø 1.2 mm / 0.05 in. holes
- **4** 1 hole Ø 2.9 mm ± 0.05 / 0.11 in. ± 0.002, for aligning the printed circuit board (with cut-out marked **a**)
- **5** 1 elongated hole for aligning the printed circuit board (with cut-out marked **b**)
- **6** 4 holes Ø 2.4 mm / 0.09 in. for clipping in adapter ZBZ01•

Dimensions An + 18.1 relate to the Ø 2.4 mm ± 0.05 / 0.09 in. ± 0.002 holes for centring adapter ZBZ01•.

Technical Description

## Electrical Composition Corresponding to Code C7

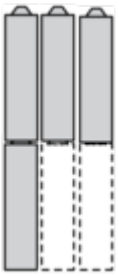

## Electrical Compositions Corresponding to Code C8

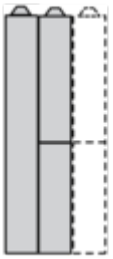

## Electrical Compositions Corresponding to Code C10

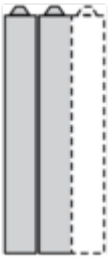

## Electrical Composition Corresponding to Codes C9, C11, SF1 and SR1

## Electrical Composition Corresponding to Code C15

1 N/O

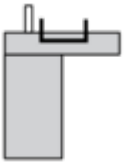

1 N/C

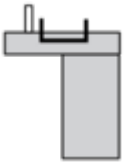

1 N/O + N/C or 1 N/O + N/O or 1 N/C + N/C

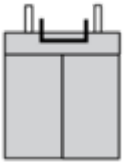

## Legend

Single contact

Double contact

Light block

Possible location