Product data sheet

Specifications

Green Premium™

discrete output module Modicon Quantum - 16 O

140DRA84000

Discontinued on: 7/12/2022

To be end-of-service on: 31/12/2030

Discontinued - Service only

Main

Range Of Product	Modicon Quantum automation platform
Product Or Component Type	Relay discrete output module
Discrete Output Number	16

Complementary

Contacts Type And Composition	1 NO
Contact Form	Form A
Discrete Output Voltage	20...250 V AC 30...150 V DC 5...30 V DC
Addressing Requirement	1 output word
Minimum Load	50 mA at 20...250 V AC 50 mA at 5...30 V DC
Maximum Load Current	1 A 250/30 V AC/DC 1/8 hp cos phi = 0.4 1 A 250/30 V AC/DC tungsten 2 A 250/30 V AC/DC resistive at 60 °C 300 mA 30...50 V DC resistive
Surge Current	10 A for 10 ms capacitive
Switching Capacity In Va	500 VA resistive
Maximum Response Time On Input Open	10 ms at state 0 to state 1 20 ms at state 1 to state 0
Mechanical Durability	10000000 cycles
Electrical Durability	100000 cycles 100 mA 30...150 V DC L/R = 10 ms 100000 cycles 2 A 30 V DC resistive 100000 cycles 30...150 V DC interposing relay 100000 cycles 300 mA 30...150 V DC resistive 200000 cycles 2 A 250 V AC resistive 50000 cycles 500 mA 30...150 V DC resistive
Output Overvoltage Protection	Internal by varistor, 275 V
Isolation Between Channels	1780 Vrms AC for 1 minute
Isolation Between Channels And Bus	1780 Vrms AC for 1 minute 2500 V DC for 1 minute
Power Dissipation	5.5 W + (0.5 x the number of points on)
Marking	CE
Local Signalling	1 LED (green) for bus communication is present (Active) 1 LED (red) for external fault detected (F) 16 LEDs (green) for input status
Bus Current Requirement	1100 mA

Disclaimer: This documentation is not intended as a substitute for and is not to be used for determining suitability or reliability of these products for specific user applications

Module Format	Standard
Net Weight	0.41 kg

Environment

Product Certifications	FM Class 1 Division 2 C-Tick GOST ABS
Standards	UL 508 CSA C22.2 No 142
Resistance To Electrostatic Discharge	4 kV contact conforming to IEC 801-2 8 kV on air conforming to IEC 801-2
Resistance To Electromagnetic Fields	10 V/m 80…2000 MHz conforming to IEC 801-3
Ambient Air Temperature For Operation	0…60 °C
Ambient Air Temperature For Storage	-40…85 °C
Relative Humidity	95 % without condensation
Operating Altitude	<= 5000 m

Packing Units

Unit Type Of Package 1	PCE
Number Of Units In Package 1	1
Package 1 Height	16.3 cm
Package 1 Width	4.5 cm
Package 1 Length	31.2 cm
Package 1 Weight	545 g
Unit Type Of Package 2	S03
Number Of Units In Package 2	7
Package 2 Height	30 cm
Package 2 Width	30 cm
Package 2 Length	40 cm
Package 2 Weight	4.46 kg
Unit Type Of Package 3	P12
Number Of Units In Package 3	168
Package 3 Height	80 cm
Package 3 Width	120 cm
Package 3 Length	105 cm
Package 3 Weight	116.04 kg

Contractual warranty

Warranty	18 months

Sustainability

Green Premium™ label is Schneider Electric's commitment to delivering products with best-in-class environmental performance. Green Premium promises compliance with the latest regulations, transparency on environmental impacts, as well as circular and low-CO_2 products.

Guide to assessing product sustainability is a white paper that clarifies global eco-label standards and how to interpret environmental declarations.

Learn more about Green Premium >

Guide to assess a product's sustainability >

RoHS/REACh

Well-being performance

Reach Free Of Svhc	
Mercury Free	
Rohs Exemption Information	Yes

Certifications & Standards

Eu Rohs Directive	Pro-active compliance (Product out of EU RoHS legal scope) EU RoHS Declaration
China Rohs Regulation	China RoHS declaration
Weee	The product must be disposed on European Union markets following specific waste collection and never end up in rubbish bins
Circularity Profile	End of Life Information

Dimensions Drawings

Racks for Modules Mounting

Dimensions of Modules and Racks

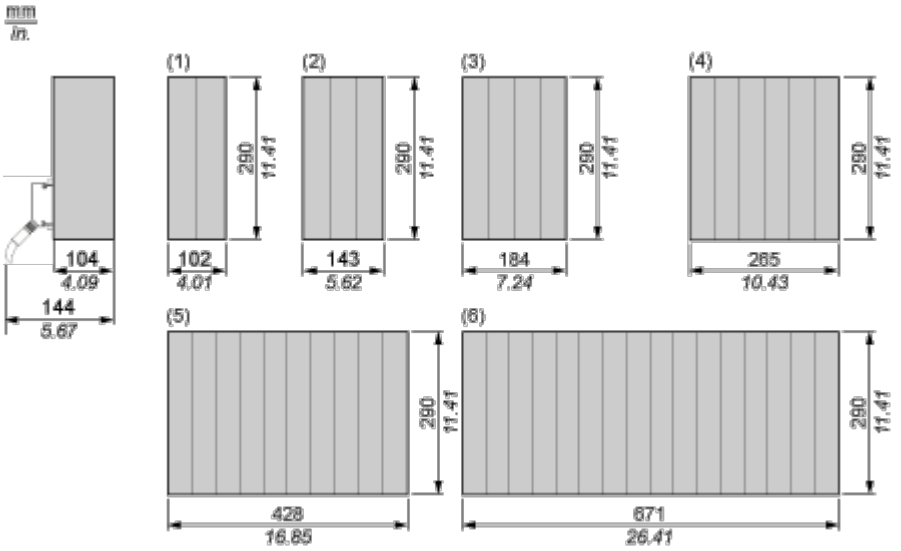

(1) 2 slots

(2) 3 slots

(3) 4 slots

(4) 6 slots

(5) 10 slots

(6) 16 slots

Connections and Schema

Relay Output Normally Open Module

Wiring Diagram

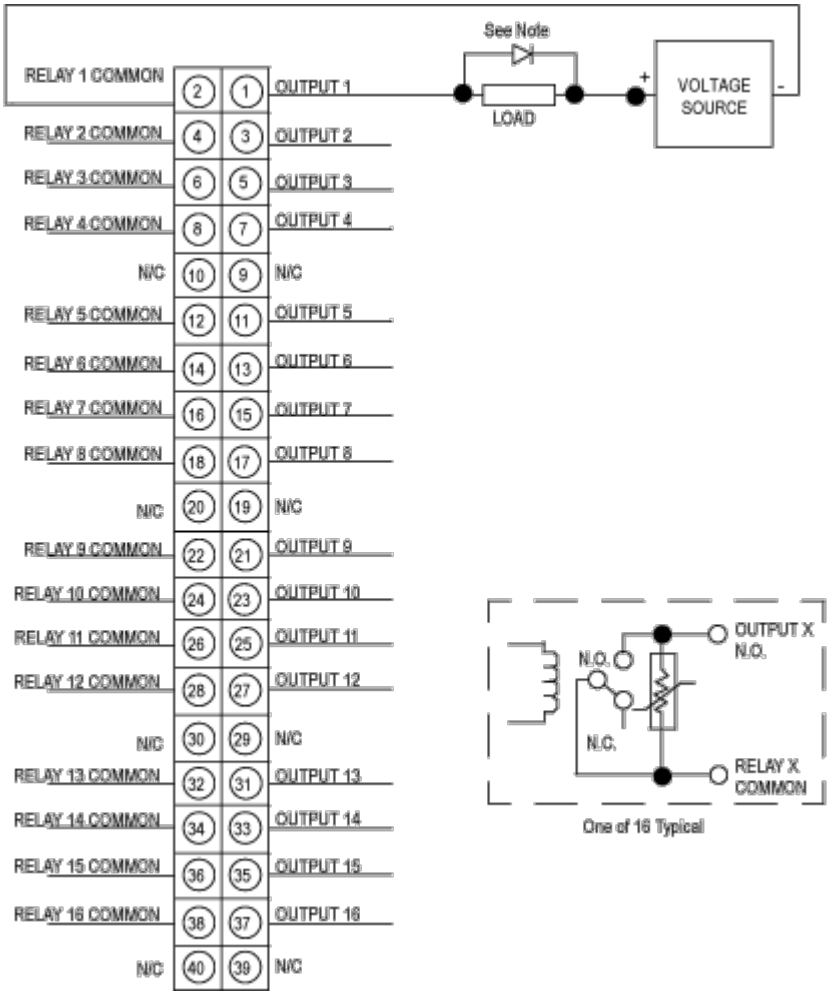

N/C Not Connected

N.O. Normally Open

N.C. Normally Closed